THE INFORMATION CONTAINED IN THIS DRAWING IS THE SOLE PROPERTY OF PREMIER MOUNTS DIVISION OF < PMPI > ANY REPRODUCTION IN PART OR WHOLE WITHOUT THE WRITTEN PERMISSION OF PREMIER MOUNTS DIVISION OF <PMPI > IS PROHIBITED.

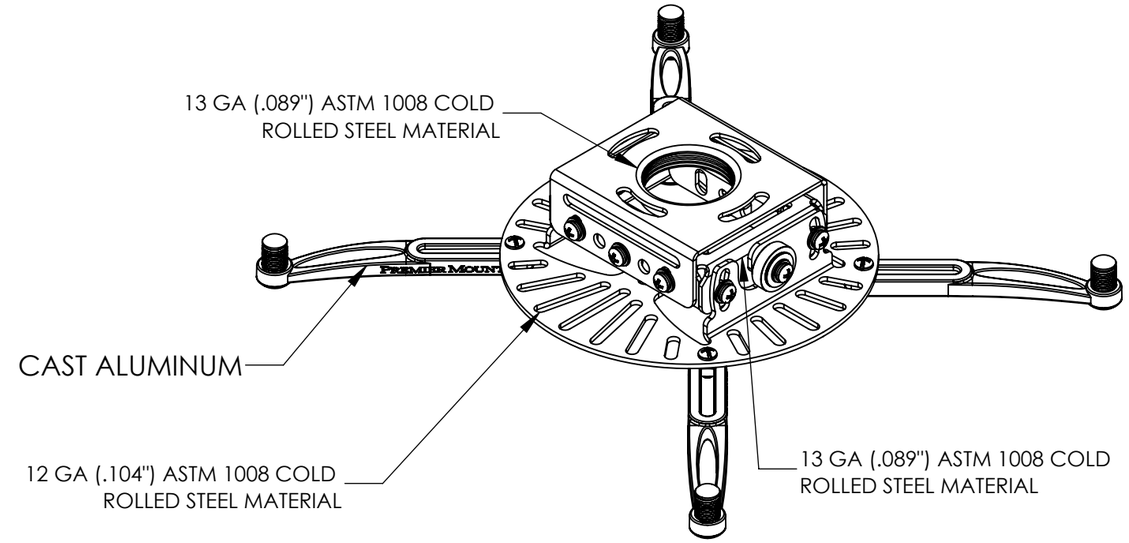

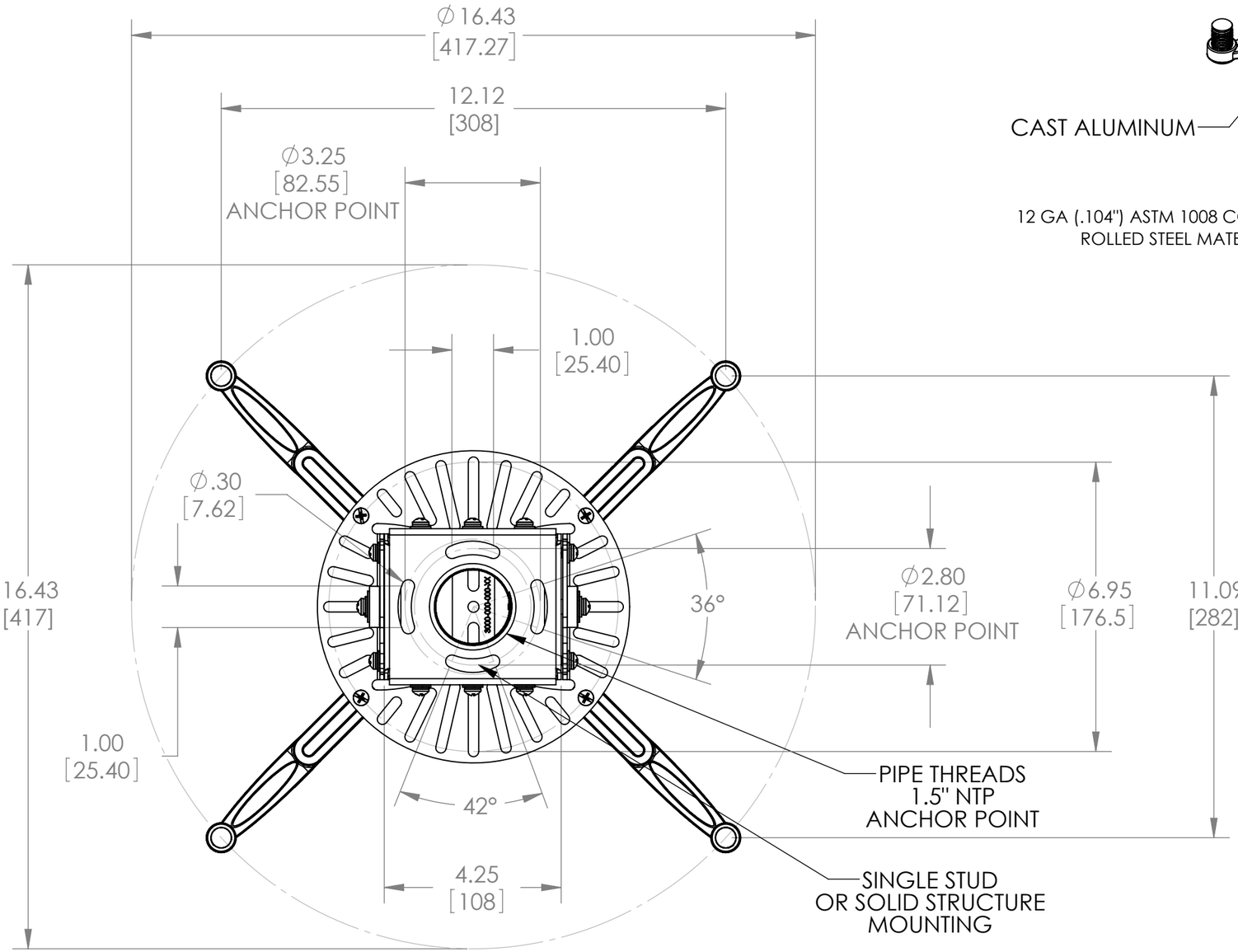

CENTER OF GRAVITY WITH 75 LBS

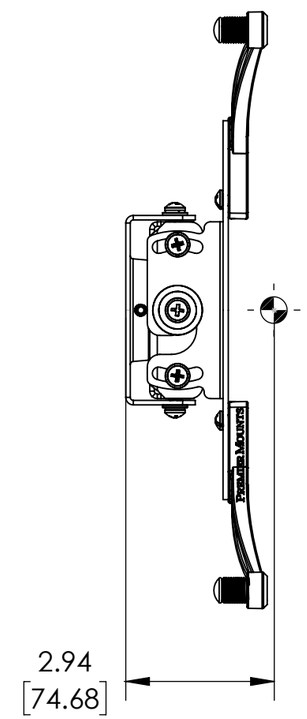

OSHPD
Office of Statewide Health Planning and Development

OPM CERT. #: OPM-0413-13

WEIGHT CAPACITY: 75 LBS
DIMENSIONS ARE IN INCHES AND [MM]

PREMIER MOUNTS
THE ORIGINAL MOUNT COMPANY
1321 South State College Blvd
Fullerton Ca, 92831
P. 800.368.9700 - F. 800.832.4888

ITEM DESCRIPTION:
LOW PROFILE PROJECTOR MOUNT

SIZE	DWG. NO.	
B	PDS-PLUS	
SCALE: 1:3		SHEET 1 OF 1

HARDWARE

WOOD - (2) #10 X 2" LG PAN HEAD PHILIPS WOOD SCREW

SOLID STRUCTURE - COMMERCIALLY AVAILABLE SUITABLE HARDWARE

PREMIERMOUNTS.COM